# User Guide
# Set-up and Operation

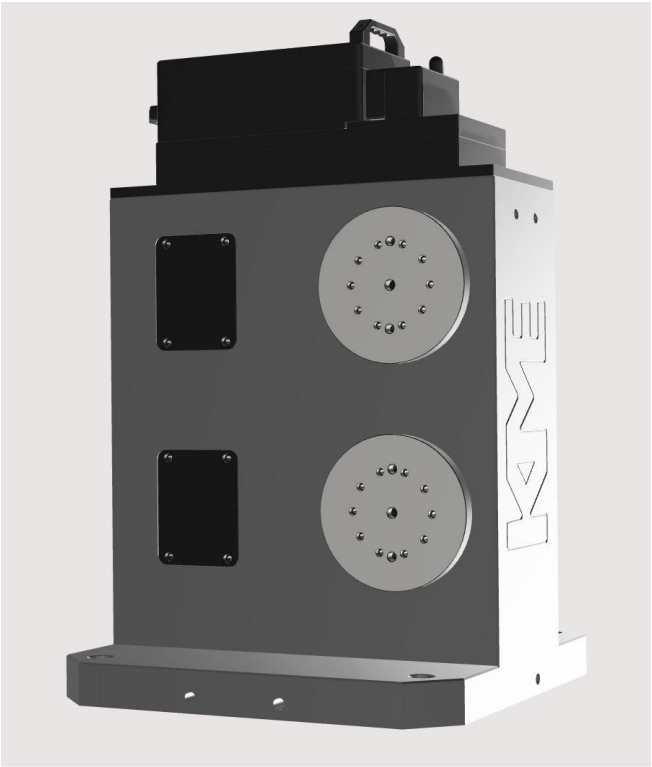

# KME CNC
# Wireless Tombstone

# Contents

**Introduction**

- **Tombstone**
  - Tombstone Diagram 3
  - Map of Drives by Configuration 4
  - Power Cells 5
  - Charging the Power Cells 5
  - RF Antenna 6
  - Faceplates 7

- **Keypad buttons**
  - Main Menu 8
  - Jog Menu 9
  - Tombstone Mode 10
  - Display Mode 11
  - Offset Mode 12

- **Display** 13
  - Battery Indicator
  - Ready Indicator
  - Drive #
  - Position

- **Set-up** 14

# Let’s get started!!!

Your KME 5-Axis Tombstone has been installed and now it is time to make some chips! This guide will walk you through operating the display keypad, programming your parts, routine maintenance, and troubleshooting. Please read through all information before operating your KME unit for the first time.

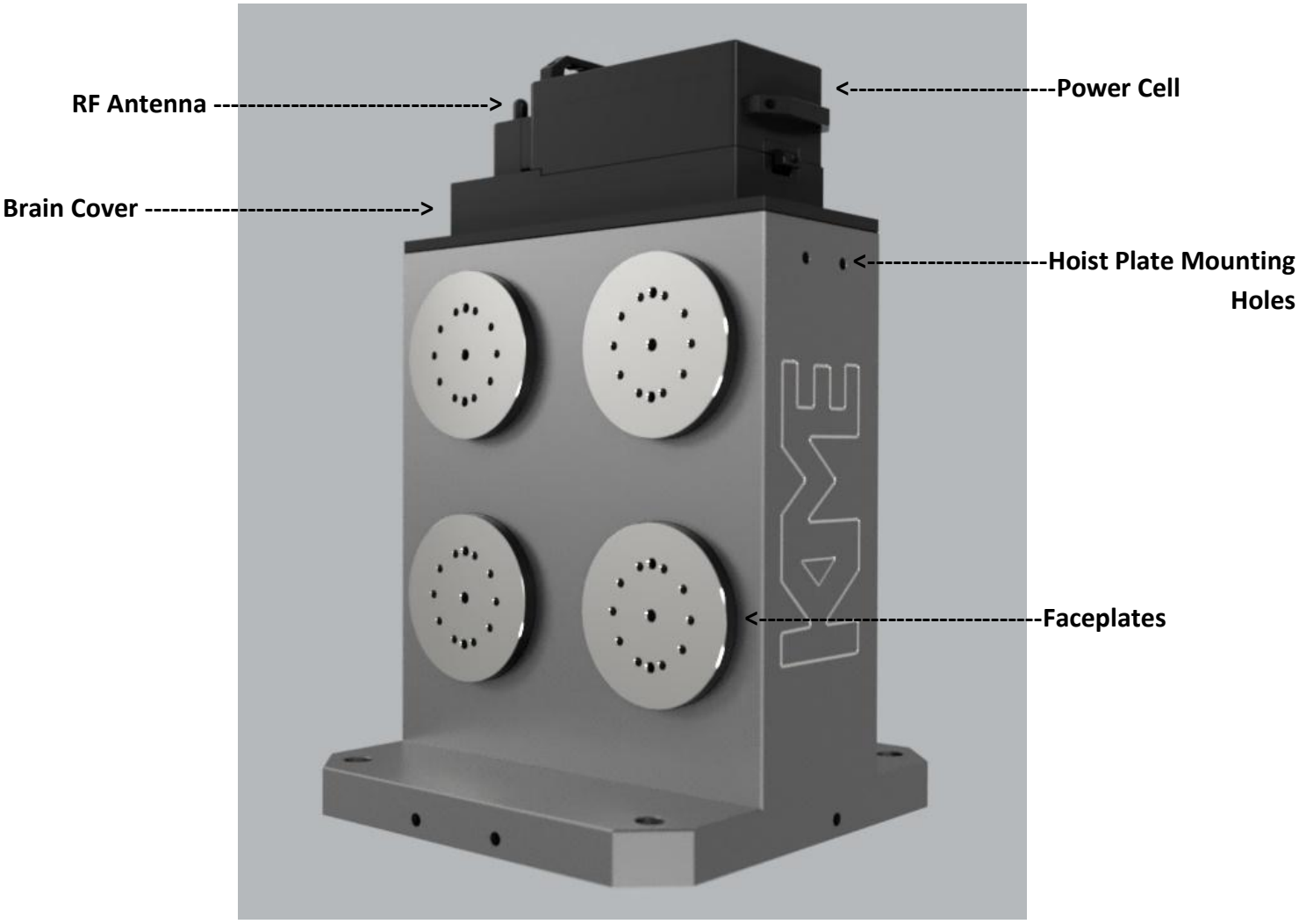


**Tombstone Diagram**

# Map of Drives by Configuration

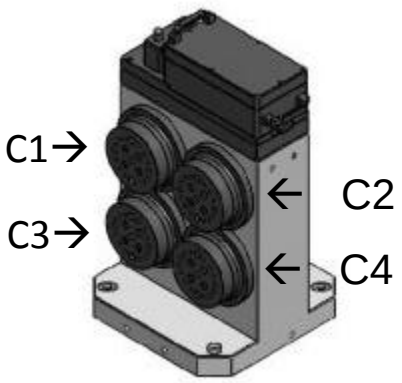


**4-0 Configuration**

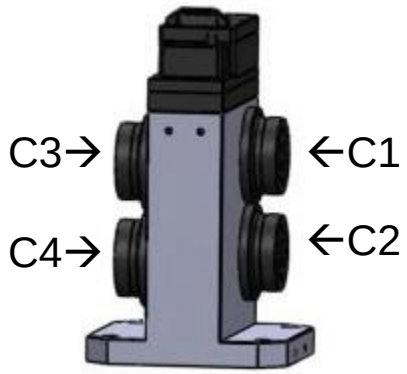


**2-2 Configuration**

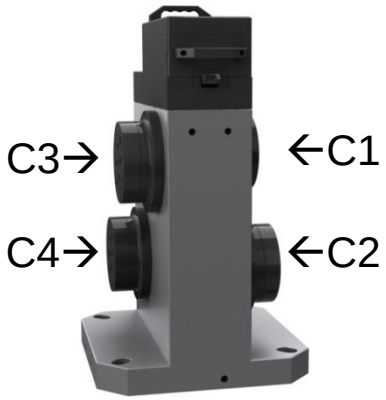


**2-2 Diagonal Configuration**

# ***Power Cells***

The tombstone comes with two power cells. Each power cell will last for 8 hours of machine time and is good for 2000 cycles at 100% capacity. Recharging time is 3.5 hours.

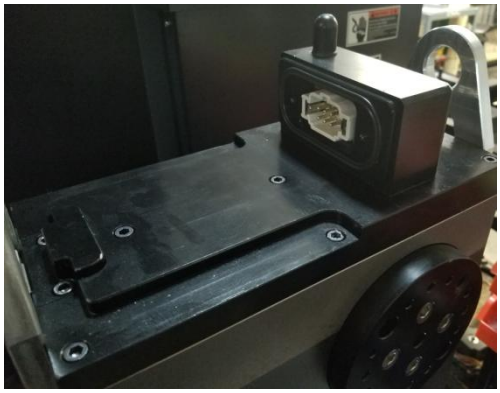

Attaching Power cell to the Tombstone: Align power cell to the slots on the top of tombstone. Gently slide power cell towards the connector until locked in place. Lock clip may need to be adjusted if too loose or tight.

To remove: Push down on the lock clip and gently slide away from the connector. Use both handles to lift once at end of the slots.

Charging the power cells: Similar to attaching to tombstone: Align power cell to the slots on the top of charger. Gently slide power cell towards the connector until snug in place, there is no lock. Red light indicates charging, Green lights indicates fully charged

# ***RF Antenna***

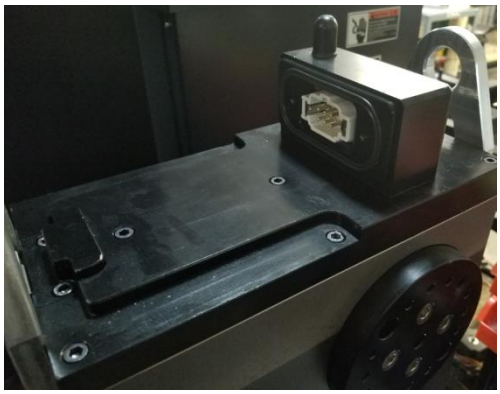

The KME Tombstone communicates wirelessly through RF (Radio Frequency) Technology. The antennas are located on top of the tombstone and the display pad. The 2.4 RF signal is very strong and reliable, there should not be any interference from other wireless devices using Bluetooth or Wi-Fi signal. It is important that these antennas are protected and replaced immediately if damaged.

# ***Faceplates***

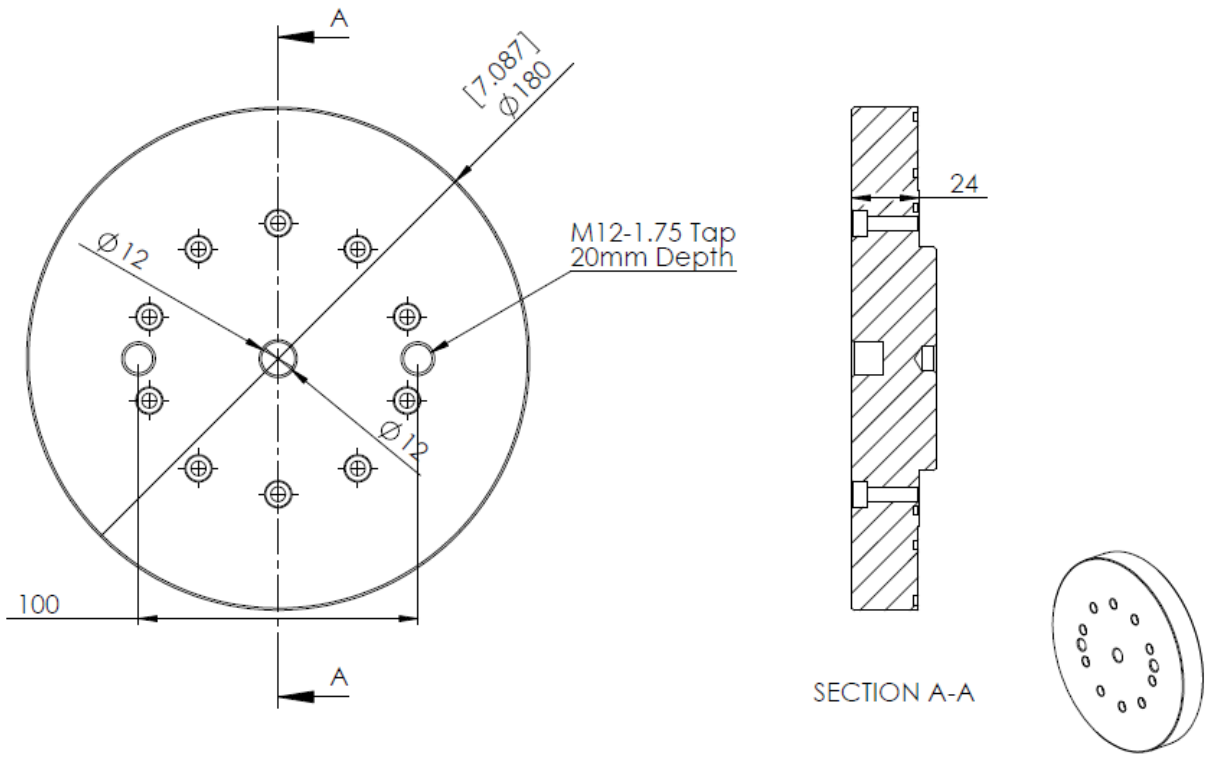


Our standard faceplate is made from G2 Iron, and includes standard mounting patterns and locating pins that will fit most workholding. Custom faceplates can also be made to accommodate non-standard mounting needs. Steel faceplates are available up to 24” for large applications.

# ***Keypad Functions – Main Menu***

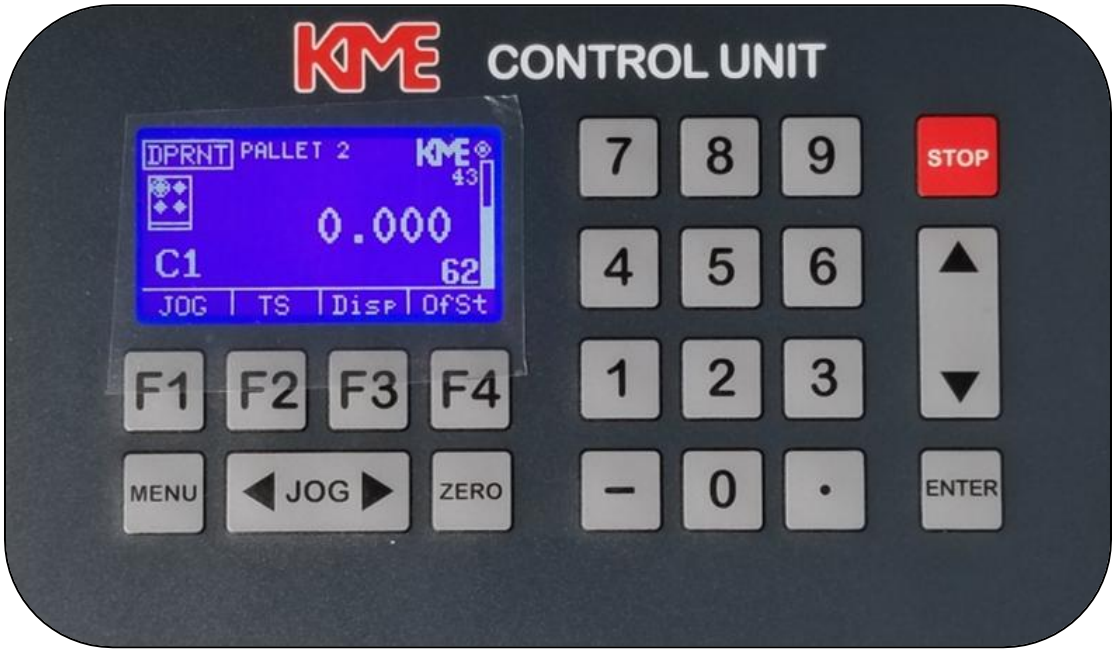


- F1 – Will display Jog Menu.
- F2 – Will display Tombstone Menu for turning unit on and off manually.
- F3 – Will display all current angels of each drive.
- F4 – Will display work Offset Menu (hold key down for 6 seconds).
- Menu – Will get you back to main menu screen from any other screen.
- < Jog > - Will move selected drive clockwise or counterclockwise when in Jog Menu.
- Zero – Will Set your work offset when in Offset Menu
- ↑↓ - Will allow you to select the drive you want to move when in Jog Menu

# ***Keypad Functions – Jog Menu***

- F1 / Feed - will allow you to select desired speed in Jog Menu 5% 50% 100%
- F2 / .1 – will allow you to move your drive incrementally 0.1°
- F3 / .01 - will allow you to move your drive incrementally 0.01°
- F4 / .001 - will allow you to move your drive incrementally 0.001°
- Menu - Will get you back to main menu screen from any other screen.
- < Jog > - Will move selected drive clockwise or counterclockwise.
- Zero – Will Set your work offset when in Offset Menu
- ↑↓ - Will allow you to select the drive you want to move

# ***Keypad Functions – Tombstone (TS) Mode***

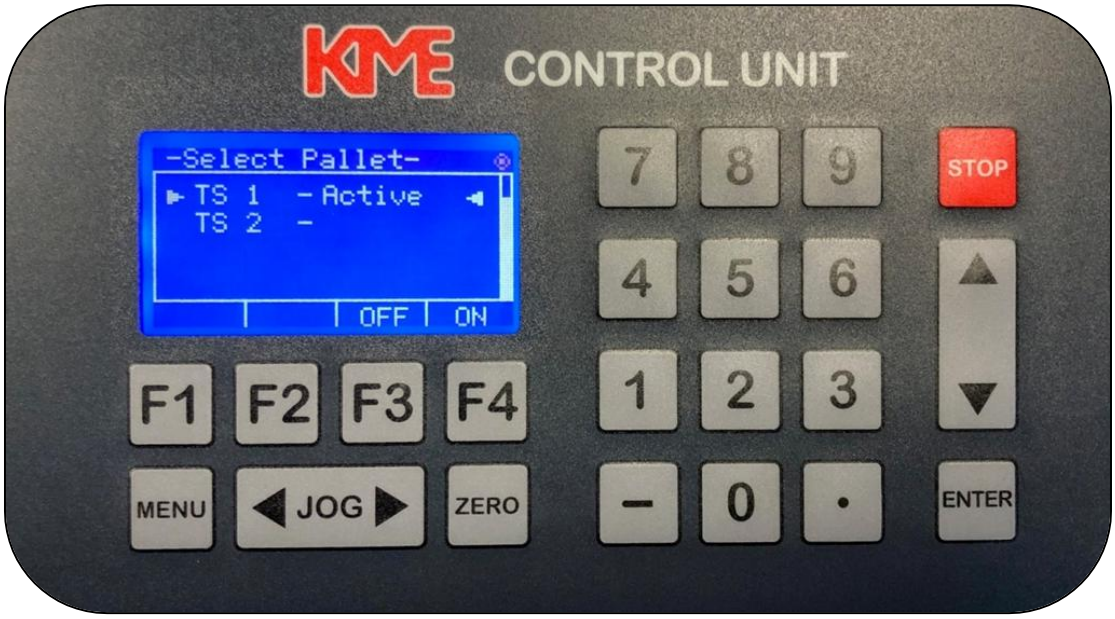


- F1 – N/A
- F2 – N/A
- F3 – Will turn your unit Off manually if unit is wireless.
- F4 – Will turn your unit On manually if unit is wireless.
- Menu - Will get you back to main menu screen from any other screen.
- < Jog > - Will move selected drive clockwise or counterclockwise when in Jog Menu.
- Zero – Will Set your work offset when in Offset Menu
- ↑↓ - Will allow you to select the drive you want to move in Jog Menu

# ***Keypad Functions – Display Mode***

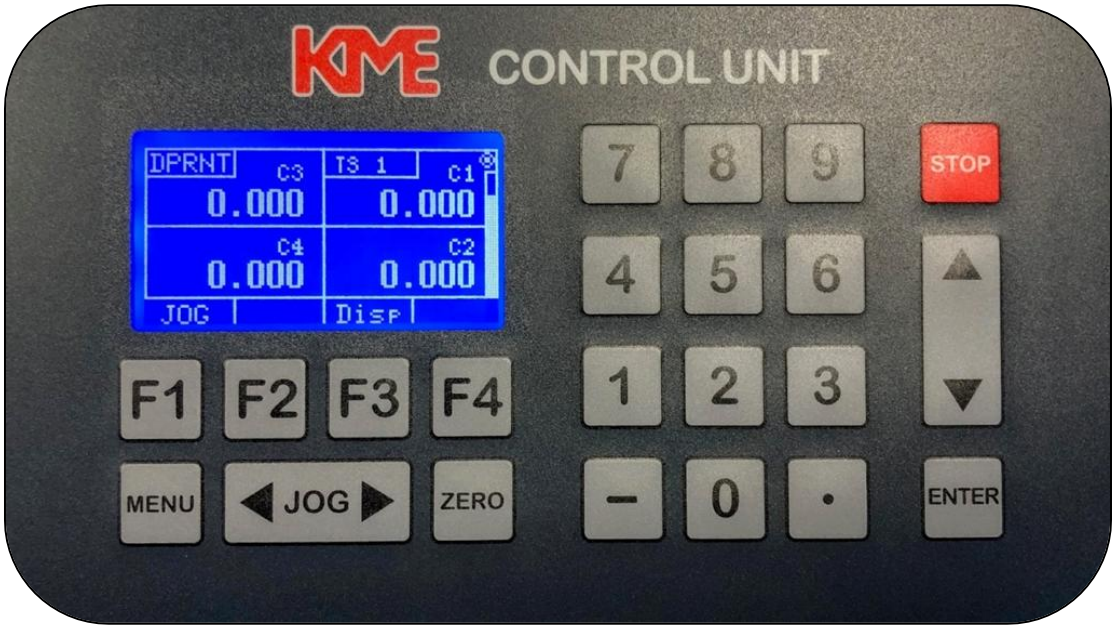


***<u>This screen is used just for visual can be used in place of Main Menu</u>***

- F1 – Will send you back to Jog Menu
- F2 – N/A
- F3 – Will send you back to Main Menu
- F4 – N/A
- Menu - Will get you back to main menu screen from any other screen.
- < Jog > - Will move selected drive clockwise or counterclockwise when in Jog Menu.
- Zero – Will Set your work offset when in Offset Menu
- ↑↓ - Will allow you to select the drive you want to move in Jog Menu

# ***Keypad Functions – Offset Mode***

***Hold down F4 key for 6 seconds to get you in the offset screen***

- F1 – Will select drive C1 to set Zero Offset
- F2 – Will select drive C2 to set Zero Offset
- F3 – Will select drive C3 to set Zero Offset
- F4 – Will select drive C4 to set Zero Offset
- Menu - Will get you back to main menu screen from any other screen.
- < Jog > - Will move selected drive clockwise or counterclockwise when in Jog Menu.
- Zero – Will Set your work offset for the drive selected C1, C2, C3, C4.
- ↑↓ - Will allow you to select the drive you want to move in Jog Menu

# ***Keypad Display***

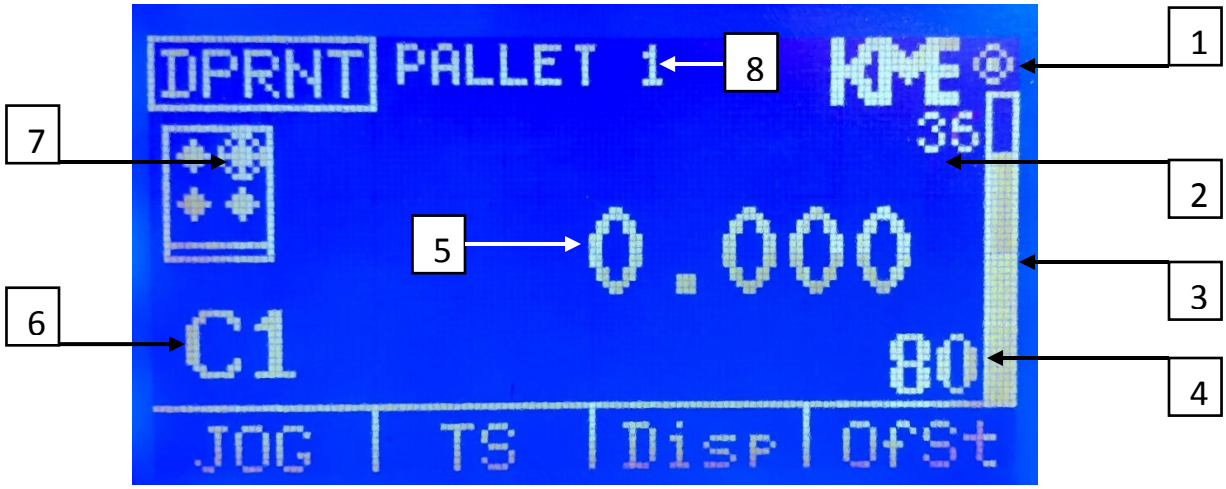


1. Ready Indicator
2. Wireless Signal Strength
3. Battery Power Indicator
4. Battery Power in Percentage
5. Displayed Angle
6. Drive Selected
7. Tombstone Drive Selected
8. Pallet that is in communication (works for more than one KME Tombstone)

# ***How to Set Up Your KME Control Unit***

**1)** After installation of your KME Unit and your machine tool is turned on, proceed by pressing (F2) key to get to the TS screen to turn ON and OFF the tombstone manually. Select with the UP and Down arrow on the right side of the keypad the desired tombstone you want to turn ON. Once highlighted now push the F4 key to turn ON and the F3 key to turn OFF.

**2)** Now press Menu Key to get to main menu. Press the (F1) key to get you into Jog mode screen. From the Jog Mode Screen, select desired drive: *C1*, *C2*, *C3*, or *C4* by using the up or down arrow. You will notice a diagram of the tombstone on the left side of the screen with the current drive that is selected.

**3)** Once desired drive is selected, you can now jog using the forward and back jog key. You will be in default speed at 5%. If you would like to go faster, then push the (F1) key again and you will be at 50% speed. If you push one more time, then you will be at 100% speed. . If you wish to obtain a specific degree angle, you have the option by entering the desired value on the numerical keypad located on the right (for example 23.523°) that angle is now displayed at the top screen. Once you push “ENTER”, your pallet would then move to the desired angle

**4)** You can set your work offset (or find your work zero / home) by selecting a probe or gauge of your choice and touching off your part. You can use incremental jogging by pushing the (F2) key for .1° or the (F3) for .01°, or (F4) Key for .001°.

**5)** Once you find your work zero, you should save this as your work offset. To accomplish this, push the “MENU” key to go back to the main menu screen. Then, hold down the (F4) key/work offset for approximately 6 seconds, the control box will enable you to enter the work offset menu from the previous screen. If done correctly, the screen will flash once. Once you are on the work offset menu screen, you will be able to save all work offsets or just a drive of your choice by selecting the appropriate keys: (F1) key for *C1*, (F2) key for *C2*, (F3) key for *C3*, and (F4) key for *C4*. After selecting a desired drive, push the “ZERO” key to set the work offset for the drive. After establishing work offsets on all desired drives, press the “MENU” key to return to the main menu.

**6)** Now, the control box is ready for use. To start cutting parts, simply push the pressing the MENU Key on the left side of the control pad to bring the KME system in DPRNT mode. The screen will read “DPRNT” on the top left corner **(as shown on page 8)**, confirming that your KME system is now ready to receive DPRNT commands from your HMC.